Pony 2, for 2 coffee ESE pods, Steamair

Ref: 602598
(UPONY2PODSA)

Professional espresso coffee POD machine, 1 group for 2 pods/cups, 6,3 liter boiler, 6 programmable dosing keys / group, progr. Water, Steamair

General Features

The PONY ESPRESSO POD is a very practical and effective solution for professionals who choose single-serve E.S.E. coffee POD to make espresso drinks. Coffee extraction quality and volume results are consistent through the days, weeks and months of operation on all selected drink sizes and quantities. The insertion of pods is very easy from the front top by the cup warmer, and the used pods are collected into a practicable and removable drawer. Drinks can be selected on the touch control box equipped with up to 6 programmable dosing selection, and with the possibility to make 1 or 2 espressos at a time per group. With its hot water and steam outlets, and a large boiler capacity, the PONY ESPRESSO POD has a truly professional application. Foaming and heating milk to a smooth consistency for perfect cappuccinos and lattes, is made very easy with the SteamAir automatic wand.

UPONY2PODSA

UNIC

Pony 2, for 2 coffee ESE pods, Steamair

Main Features

- Professional espresso coffee POD machine.
- Coffee extraction quality and volume results are consistent through the days, weeks and months of operation on all selected drink sizes and quantities.
- The insertion of pods is very easy from the front top by the cup warmer, and the used pods are collected into a practicable and removable drawer.
- Drinks can be selected on the touch control box equipped with up to 6 programmable dosing selection, and with the possibility to make 1 or 2 espressos at a time per group.
- Foaming and heating milk to a smooth consistency for perfect cappuccinos and lattes, is made very easy with the SteamAir automatic wand.
- 1 group for 2 pods/cups.
- 2 programmable dosing program.
- Automatic cleaning cycle.
- Programmable water.

Construction

- Stainless steel body.
- 6.3 liter boiler.
- Removable used pods drawer.
- Adjustable cup holder.

Optional Accessories

• Side milk refrigerator 8 liter nominal capacity for up to 4 liter milk containers	PNC 871014	❑
• Side milk refrigerator 8 liter nominal capacity for up to 4 liter milk containers with digital display	PNC 871015	❑

UNIC

Pony 2, for 2 coffee ESE pods, Steamair

Electric

Supply voltage:	
602598 (UPONY2PODSA)	230 V/1N ph/50 Hz
Electrical power max.:	3 kW
Plug type:	Cable without plug

Water:

Cold water temperature (min/max):	5 / 60 °C

Key Information:

External dimensions, Width:	343 mm
External dimensions, Depth:	570 mm
External dimensions, Height:	580 mm
Net weight:	47 kg
Shipping volume:	0.32 m³
Sustainability	
Current consumption:	13 Amps

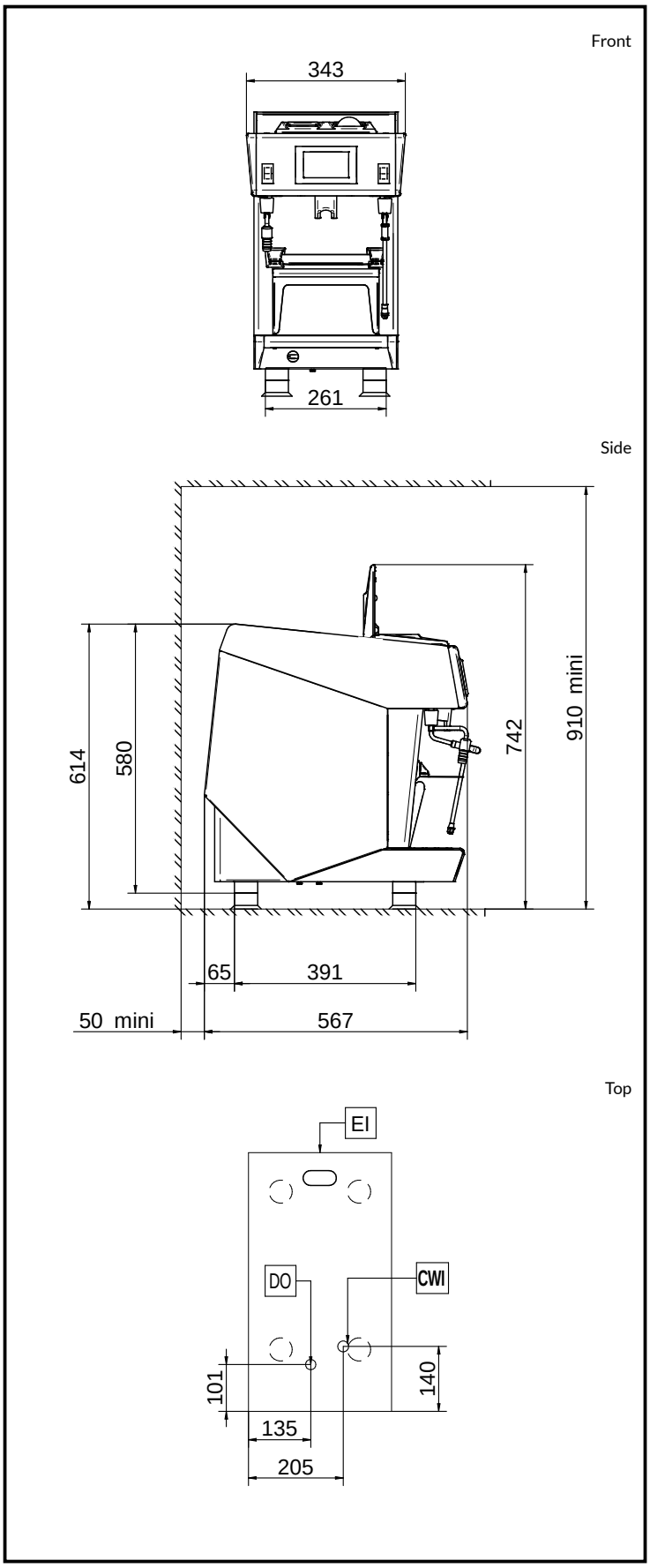

Certifications

The company reserves the right to make modifications to the products without prior notice. All information correct at time of printing.

2024.10.11

Part of Electrolux Professional Group

UNIC